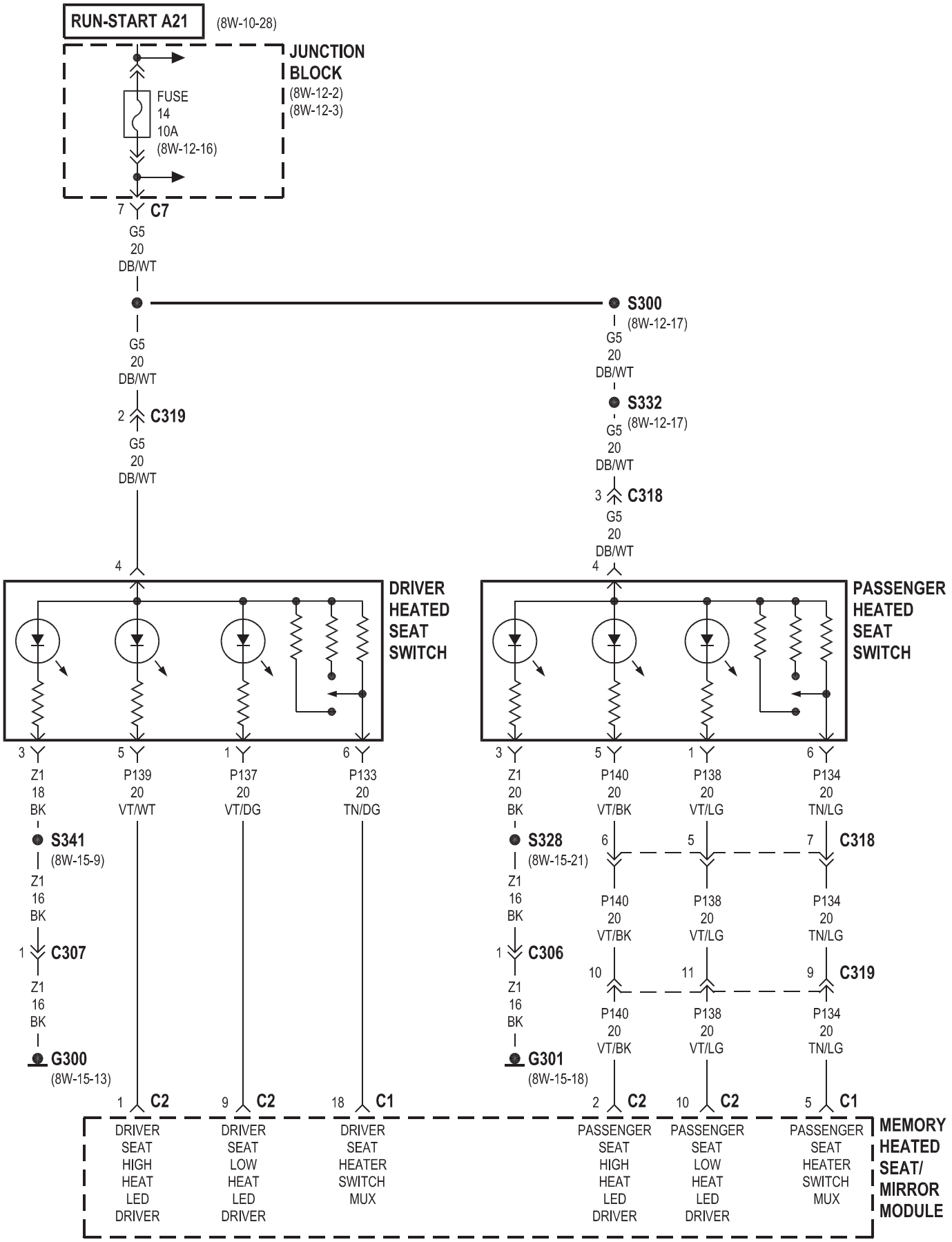
RUN-START A21
(8W-10-28)
JUNCTION BLOCK
(8W-12-2)
(8W-12-3)
FUSE
14
10A
(8W-12-16)
7 C7
G5
20
DB/WT
S300
(8W-12-17)
G5
20
DB/WT
S332
(8W-12-17)
G5
20
DB/WT
2 C319
G5
20
DB/WT
3 C318
G5
20
DB/WT
4
4
DRIVER HEATED SEAT SWITCH
PASSENGER HEATED SEAT SWITCH
3 Z1 18 BK
5 P139 20 VT/WT
1 P137 20 VT/DG
6 P133 20 TN/DG
3 Z1 20 BK
5 P140 20 VT/BK
1 P138 20 VT/LG
6 P134 20 TN/LG
S341
(8W-15-9)
Z1
16
BK
1 C307
Z1
16
BK
G300
(8W-15-13)
S328
(8W-15-21)
Z1
16
BK
1 C306
Z1
16
BK
G301
(8W-15-18)
6 P140 20 VT/BK
5 P138 20 VT/LG
7 P134 20 TN/LG
C318
P140 20 VT/BK
P138 20 VT/LG
P134 20 TN/LG
10 P140 20 VT/BK
11 P138 20 VT/LG
9 P134 20 TN/LG
C319
1 C2
9 C2
18 C1
2 C2
10 C2
5 C1
DRIVER SEAT HIGH HEAT LED DRIVER
DRIVER SEAT LOW HEAT LED DRIVER
DRIVER SEAT HEATER SWITCH MUX
PASSENGER SEAT HIGH HEAT LED DRIVER
PASSENGER SEAT LOW HEAT LED DRIVER
PASSENGER SEAT HEATER SWITCH MUX
MEMORY HEATED SEAT/ MIRROR MODULE

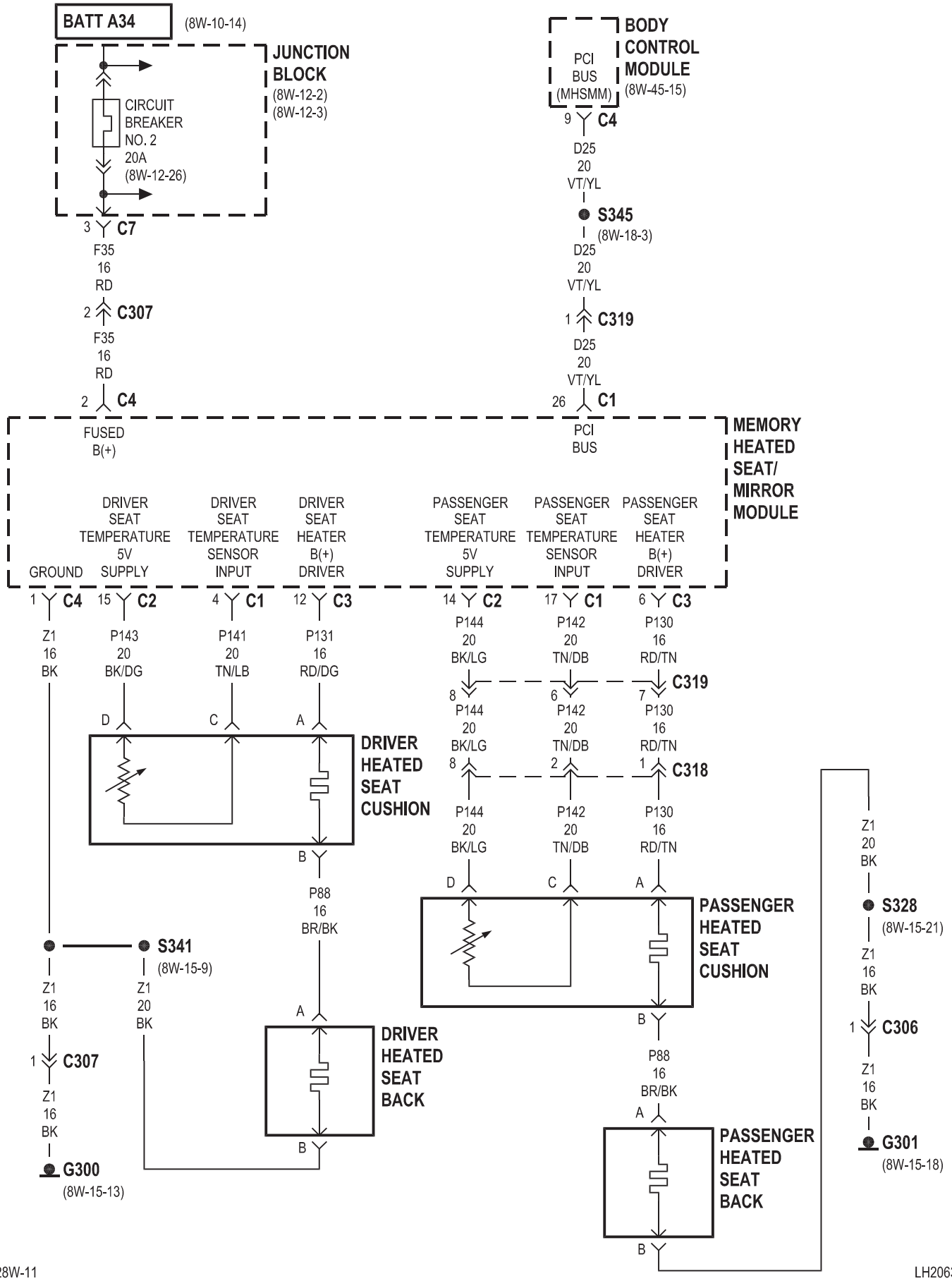
BATT A34
(8W-10-14)
JUNCTION BLOCK
(8W-12-2)
(8W-12-3)
CIRCUIT BREAKER NO. 2 20A
(8W-12-26)
3 C7
F35 16 RD
2 C307
F35 16 RD
2 C4
FUSED B(+)
BODY CONTROL MODULE
(8W-45-15)
PCI BUS (MHSMM)
9 C4
D25 20 VT/YL
S345
(8W-18-3)
D25 20 VT/YL
1 C319
D25 20 VT/YL
26 C1
PCI BUS
MEMORY HEATED SEAT/ MIRROR MODULE
GROUND
DRIVER SEAT TEMPERATURE 5V SUPPLY
DRIVER SEAT TEMPERATURE SENSOR INPUT
DRIVER SEAT HEATER B(+) DRIVER
PASSENGER SEAT TEMPERATURE 5V SUPPLY
PASSENGER SEAT TEMPERATURE SENSOR INPUT
PASSENGER SEAT HEATER B(+) DRIVER
1 C4
15 C2
4 C1
12 C3
14 C2
17 C1
6 C3
Z1 16 BK
P143 20 BK/DG
P141 20 TN/LB
P131 16 RD/DG
P144 20 BK/LG
P142 20 TN/DB
P130 16 RD/TN
C319
8 P144 20 BK/LG
6 P142 20 TN/DB
7 P130 16 RD/TN
C318
1 P130 16 RD/TN
D
C
A
B
DRIVER HEATED SEAT CUSHION
P88 16 BR/BK
S341
(8W-15-9)
Z1 16 BK
Z1 20 BK
1 C307
Z1 16 BK
G300
(8W-15-13)
DRIVER HEATED SEAT BACK
PASSENGER HEATED SEAT CUSHION
P88 16 BR/BK
PASSENGER HEATED SEAT BACK
Z1 20 BK
S328
(8W-15-21)
Z1 16 BK
1 C306
Z1 16 BK
G301
(8W-15-18)